User Manual

TKLSEA7C

ELECTRIC TRANSFER STRETCHER

Contents

I. Structure·····2

Technical Specifications, Features, Operation Conditions·····3

Target Application Places and Contraindication·····4

II. Precautions for Safe Use and Notices·····4

III. Operation Instruction·····4

IV.Electromagnetism Compatibility·····7

V. Cleaning, Maintenance, Storage and Transporting·····10

VI. Common Faults and Exclusion·····12

VII. Packing List·····12

VIII. Graphic Symbols Meaning ·····12

IX. Service Life·····13

I. Structure, technical specifications, features, operation conditions, target application places and contraindication

1.1 Structure

Electric transfer stretcher equipped with ReachctrlPower plus inner battery, and consists of bed board part (Back section, seat section, leg section and foot section), frame part (bed frame, right and left side rail, gas spring, hand holder, I.V. pole), lower frame part (ascending and descending device, central control device, castors and direction castor), electric control part (elevating motor).

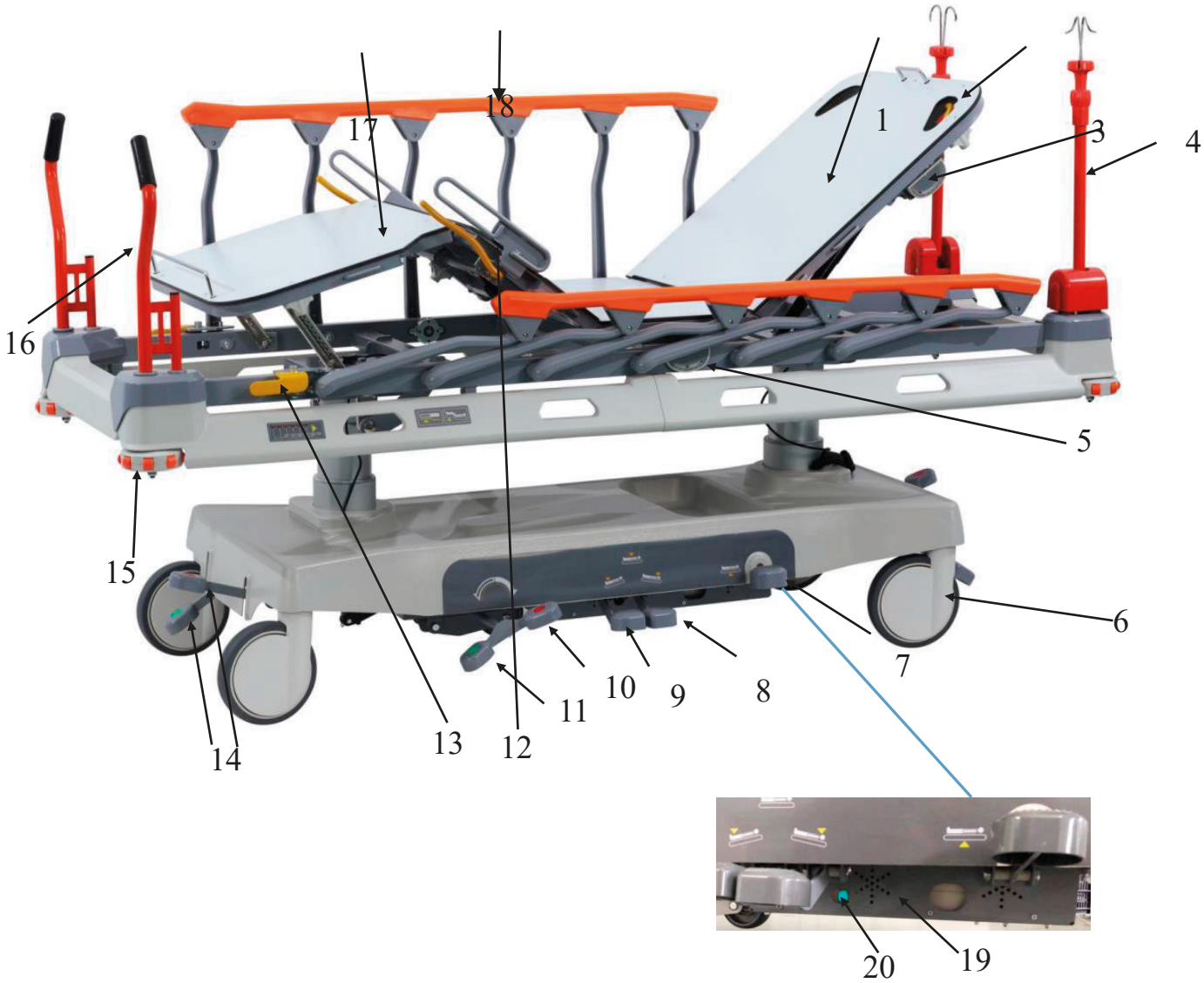

compositions:

（1）——Head Bed Board **（2）——Switch** **（3）——back angle indicator**

（4）——I.V.Pole **（5）——Bed angle indicator** **（6）——castor**

(7)------UP PEDAL

（8）——Rev-Trendelenburg Pedal　（9）——Trendelenburg Pedal　（11）——Direction Castor
（10）——Pedal for Direction Castor　（12）——Up&down Switch for Leg Section
（14）——Brake Pedal　（13）—— Side Rail Switch　（15）——Bumper
（16）——Handholder　（17）——Foot Bed Board　（18）—— Side Rail
（19）——Control box　（20）——Power switch

1.2 Technical Specifications

Main Material	Steel framework, stainless steel foldable side rail. Isolating glass fiber bed board, ABS chassis cover.
Overall size	2170mm 长×780mm 宽(±5mm)
Bed board size	1915mm 长×630mm 宽(±5mm)
Hi-Low height	525mm-750mm(±5mm)
Castor	4 pcs Φ200mm universal castors，1 pc Φ100mm direction castor
Back-rest lifting	0-75°±2°
Leg-rest lifting	0-40°±2°
Trendelenburg & Rev	0-12°±1°
Net weight	148KG
Load capicity	250KG
Operating Noise	<65dB(A)
Storage Battery	Storage 24V 2.6AH;
Power	AC 220V 50Hz
Max Voltage	150W

1.3 Features

Ascending and descending bed body can be realized by treading pedal switch.

1.4 Operation Conditions

This product is supposed to be used in hospitals and similar sites.

Expected operating environment:

a)Environment Temperature Range: 10℃~40℃;

b)Relative Humidity Range: ≤80%;

c)Atmosphere Pressure Range: 760hpa~1060hpa;

d)Power: AC220V±22 V, 50Hz±1Hz。

e)Inner Operation Voltage: DC24V

1.5 Target application places and contraindication

1.5.1 Target Application Places

Emergency clinic and similar places.

1.5.2 Target users

Patients that need to be rescued or transferred.

1.5.3 Contraindication

Unknown.

II. Precautions for Safe Use and Notices

■Make sure the bed board is in flat position when the patient is unattended and may get stuck (such as the condition where the patient lost sense of direction because of medicine effect ect.)

■Make sure the bed is in lowest position when the patient is unattended in order to reduce the risk of rolling down from the bed.

■Children or the people who do not know how to operate are not allowed to operate , otherwise it may result in damage to the bed.

■When adjusting the bed, please do not put your hand (finger) or foot in between bed body and bed board, you may get stuck by the descending board and stretcher frame.

■Make sure the side rail has ascended in right position when using it. Please note the side rails can not bear heavy load.

■Please be careful when adjusting height to avoid get hit on wall or beam ect.

■Please tread brake after using, and unlock brake before using to avoid damage to the castors.

■Keep it away from fire. DO NOT use it in the environments where there’s inflammable anesthetics mixed with air, oxygen or nitrous oxide.

■Please do not sit on the rising back panel or leg panel. The support part of the panel is under greater force and is prone to deformation.

■Please use the medical electric transfer vehicle in the correct direction. When in use, the head should face the headboard.

■Please do not assemble and use it with products other than those specified. Please do not repair or

modify it by yourself.

■Please operate strictly in accordance with the product usage instructions in the product manual. Failure to do so may easily lead to equipment failure and personal injury.

III. Operation Instruction

3.1 Power Switch

Press power switch when it’ s power-off, the product will start working when the green light is on. Check if everything works fine without any load, please be sure that height and angle are exactly same as setting figures, and the product is operating smoothly without any noise.

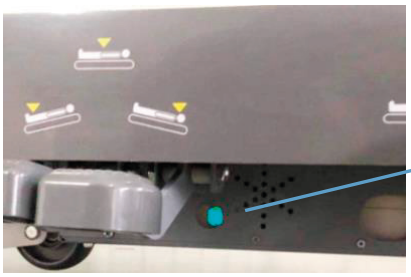

Power switch (If a person is injured by a moving part, Please turn off this power switch immediately.

3.2Backrest（0-75° ±2° ）

Controlled by gas spring.

Backrest ascending---As shown in the figure turn on the gas spring switch on each side with both hands. Under no-load condition, hold slightly on the back to avoid ascending too fast. Under load condition, switch on and give a little force upward to adjust the backrest to suitable position.

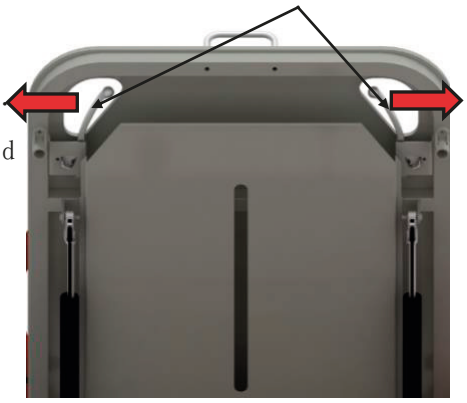

Backrest descending----Turn on gas spring switch and give pressure downward to make backrest descend. It will stop once the switch truned off.

A protractor is provided on the back bed panel near the head of the bed for measurement The Angle at which the back is tilted.

Back-tilted protractor

3.3 Legrest（0-40° ±2° ）

Legrest ascending---raise up switch to raise up legrest board.

Legrest descending---raise up switch and press legrest

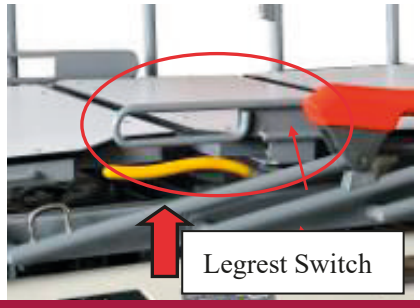

board in the same time to make it descend.

3.4 Side Rail

Side rail will go down towards head board when switch turned on (mind your hand). Raise up side rail and lock it with the switch to make it remain standing.

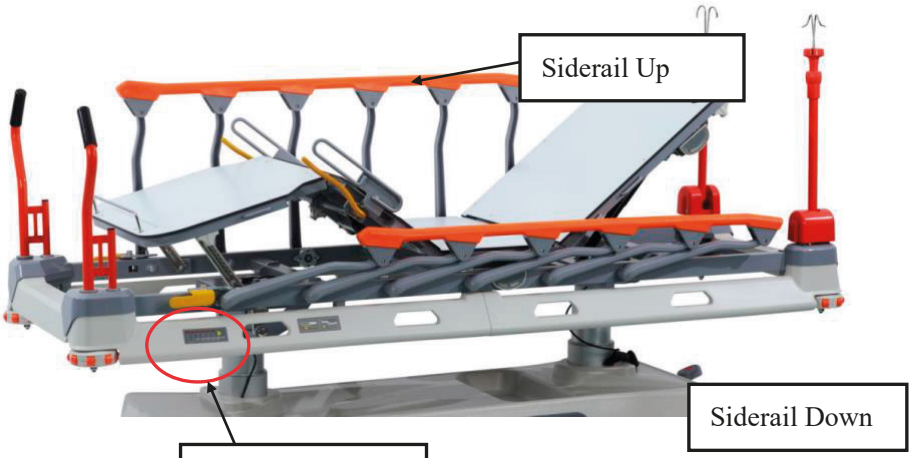

3.5 Pedal

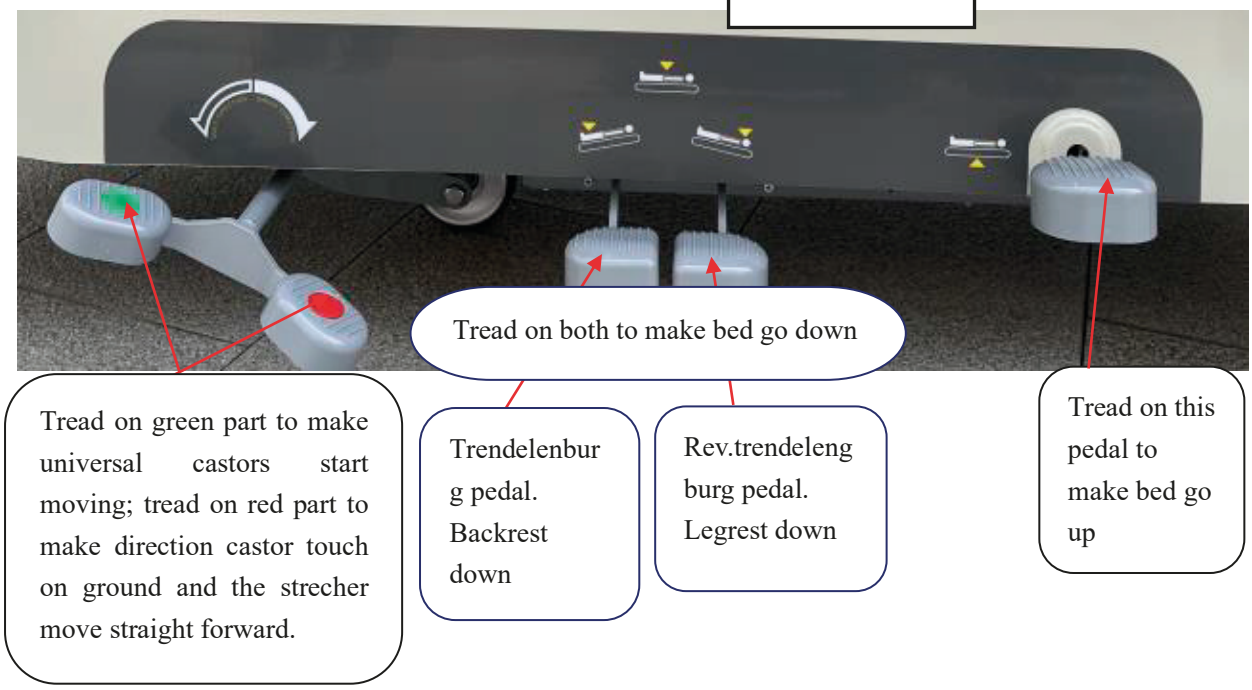

Note: when bed is ascending to the highest position, the stretcher can be lowered only by treading on both rev-trendelenburg and trendelenburg pedals.

3.6.UP & DOWN

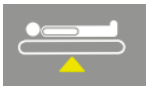

Tread on the UP pedal to make stretcher go up.

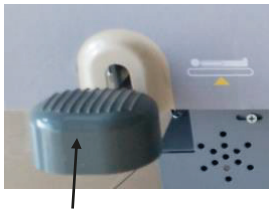

UP Pedal

3.6.2Trendelenburg & Rev. Trendelenburg（0° -12° ±1° ）

Tread down the left DOWN pedal to get Trendelenburg position.

Tread down the right DOWN pedal to get Rev. Trendelenburg position.

Tread on both to make bed go down.

UP-DOWN：750mm-525mm（±10mm）（castor Φ200mmm）

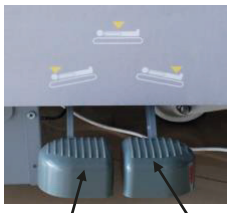

Trendelenburg Rev. Trendelenburg

A protractor is provided on the leg bed panel near the end of the bed for measurement The Angle at which the bed surface is inclined.

Bed surface inclined protractor

3.6.3 Usage Method of Guide wheels

The guide wheel device serves the function of directional straight travel. If you want to go straight, step on the foot pedal marked with a "red" stripe on the side.

The guide wheels touch the ground. If you are not going straight ahead, you can step on the foot pedal marked with a "green" strip on the side. The vehicle body can be driven freely Move in direction. (As shown in the picture

3.7 I.V. Pole

Hold the lower part of the salt water rack and pull it upwards simultaneously. You can stand it up or tuck it in

Start the brine rack. (As shown in the following figure

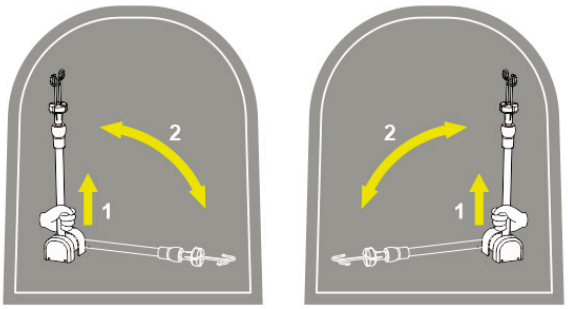

I.V. Pole Operation

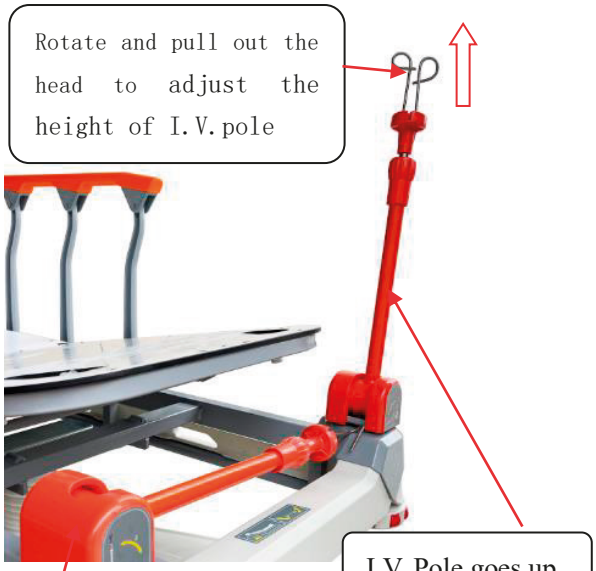

3.8 Brake System

Press the red pedal to keep the brake position ,stretcher will be stopped

Press the blue pedal to release the brake ,stretcher cane be moved

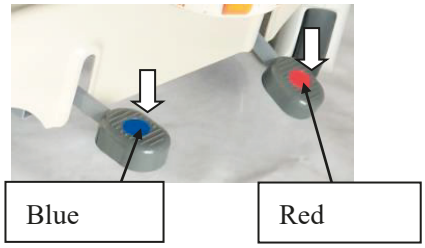

IV. Electromagnetism Compatibility

Group 1 Calss B Product

Special precautions of electromagnetism compatibility (EMC) must be applied to this product. Users should follow the stated EMC information when assembling or operating this product.

Portable and mobile Rfcomm communication devices might cause effect to this product.

The following cable is recommended to match with the requirements on electromagnetic emission and anti-interference:

Cable Name	Length
Cable (10A)	3.2 meters

Using other accessories and cables (transducer) may increase the emission or reduce the anti-interference ability of the device or system.

This device can not be operated when sitting near/stacked upon other devices, unless it has been tested and operated well.

Name	Description
Proper Operating Inner Power	Auto-operation: Apply the following steps in 20 seconds after power on. Turn on control box switch on below the bed, when the green light is on, you are allowed to do height adjustment and other functions.

Instruction and Producer Declaration——Electromagnetism Emission **This device is supposed to use in the following electromagnetism environment:**		
Emission Test	**Coincidence**	**Electromagnetism Environment**
RF Emission GB 4824	Group 1	**This device uses RF energy only to operate inner functions, thus its RF emission is very weak, and will have very low possibility to cause influence on electric devices nearby.**
RF Emission GB 4824	Class B	**This device can be used in any facilities, including household or public low voltage power grid.**
harmonic radiation GB 17625.1	Class A	

Voltage Fluctuation/Scintillator Emission GB 17625.2	Coincident	

Instruction and Producer Declaration——Electromagnetism interference **This device is supposed to use in the following electromagnetism environment:**			
Interference Test	**IEC60601 Test Level**	**Coincident Level**	**Electromagnetism Environment**
ESD GB/T 17626.2	± 6kV contact discharge ±8kV air discharge	±6kV contact ±8kV air	Floor must be wood, concrete or tile. If floor is covered with complex material, relative humid must be at least 30%.
EFT GB/T 17626.4	± 2kV to power cable ± 1kV to input/output cable	± 2kV inapplicable to power cable	ReachctrlPower should have the quality typically for use in business or hospital environment.
Surge GB/T 17626.5	±1kV line to line ±2kV line to ground	± 1kV inapplicable to line to line	ReachctrlPower should have the quality typically for use in business or hospital environment.
Voltage sag, short interruption and voltage change on input power cable GB/T 17626.11	< 5% U_T, last for 0.5period(> 95% voltage sag on U_T) 40% U_T, last for 5 periods(60% voltage sag onU_T) 70% U_T, last for 25 periods(30% voltage sag onU_T) < 5% U_T, last for 5s (> 95% voltage sag on U_T)	< 5% U_T, last for 0.5period(> 95% voltage sag on U_T) 40% U_T, last for 5 periods(60% voltage sag onU_T) 70% U_T, last for 25 periods(30% voltage sag onU_T) < 5% U_T, last for 5s (> 95% voltage sag on U_T)	ReachctrlPower should have the quality typically for use in business or hospital environment. Ceaseless power supply is recommended if user needs to use it when power's off.
PFMF（50Hz） GB/T 17262.8	3 A/m	3 A/m	PFMF should have the quality typically for use in business or hospital environment.
Notice: U_T refers to AC grid voltage before applying test voltage			

Instruction and Producer Declaration——Electromagnetism interference **This device is supposed to use in the following electromagnetism environment:**			
Interference Test	**IEC60601 Test Level**	**Coincident Level**	**Electromagnetism Environment**
RF conduction GB/T 17262.6	3 V（virtual value） 150kHz - 80MHz	3 V（virtual value）	Portable and mobile Rfcomm communication devices can not

radiofrequency radiation GB/T 17262.3	3 V/m 80MHZ - 2.5GHZ	3 V/m	be used in the distance closer than that is recommended to any part of this device, including cable. This distance can be calculated by the formula of corresponding transmitter frequency Recommended distance $d = 1.2\sqrt{(P)}$ 150kHz-80MHz $d = 1.2\sqrt{(P)}$ 80MHz-800MHz $d = 2.3\sqrt{(P)}$ 800MHz-2.5GHz P——Max rated output power offered by transmitter maker with unit（W）； d——Recommended distance with unit（m） Field intensity of stationary type RF transmitter[a] can be confirmed by testing the electromagnetism environment. It must be lower than coincident level[b] in every frequency range。 Interference may happen near the devices which labeled as blow.

Notice 1： Use high frequency section formula on 80MHz and 800MHz

Notice 2： This instruction may not work for all kinds of situations, as teleport of electromagnetism can be absorbed and reflected by constructions, objects and human bodies.

[a]Stationary type RF transmitter, such as wireless (honeycomb/cordless) telephone and mobile ground wireless base station, amateur radio, FM and AM wireless radio and telecast ect. can not be predicted according to the theory of field intensity. Electromagnetism site survey is necessary to assess electromagnetism environment of stationary type RF transmitter. If the field intensity is higher than above mentioned RF coincident level, then the device should be tested if it works well or not. If it does not work well, then some supplement measures maybe necessary, such as adjusting the device's direction or location.

[b] Field intensity should lower than 3V / M in the frequency range of 50kHz-80MHz

Recommended distance between portable and mobile Rfcomm communication devices and **this device** If **this device** is expected to use in electromagnetism environment. According to communication device's Max rated output power, user can avoid electromagnetism interference by using the following minimum distance between portable and mobile Rfcomm communication devices and **this device**			
Max transmitter rated output power W	Interval distance for different transmitter frequencies/m		
	150kHz - 80MHz $d = 1.2\sqrt{(P)}$	80MHz - 800MHz $d = 1.2\sqrt{(P)}$	800MHz - 2.5GHz $d = 2.3\sqrt{(P)}$
0.01	0.12	0.12	0.23
0.1	0.38	0.38	0.73
1	1.2	1.2	2.3
10	3.8	3.8	7.3
100	12	12	23
For those max transmitter rated output powers not listed in upper table, recommended distance d with unit (m) can be confirmed by the formula of corresponding transmitter frequency, P refers to Max rated output power offered by transmitter maker with unit（W） **Notice 1：** Use high frequency section formula on 80MHz and 800MHz **Notice 2：** This instruction may not work for all kinds of situations, as teleport of electromagnetism can be absorbed and reflected by constructions, objects and human bodies.			

V. Cleaning, Maintenance, Storage and Transporting

5.1 Cleaning and maintenance

■General cleaning for stretcher and side rail

Clean it with soft cloth which dip with diluted neutral detergent ,then clean off the diluted neutral detergent by cloth with clean water , finally, wipe it with dry cloth.
Sterilize it thoroughly after using by patients that with infectious disease. Under the condition of cleaning thoroughly, please sterilize it in low temperature environment.

※Do not use volatile items (diligent, volatile agents, gasoline)

※Forbidden to touch water. (Please do not put water on bed, otherwise it may cause electric shock because of short circuit.)

■Preventive safety inspection and maintenance

Preventive safety inspection and maintenance only allowed for Professionals

Check stuck situation , loose fasteners and any presence of safety risks.

Add lube to the moving parts to assure smooth working

Inspection and maintenance intervals for 1 year

■**Maintenance, replace and recycle of storage battery**

Please contact us if the storage battery needs maintenance or replace. Do not do it by yourself.

Storage battery must be retrieved by us, forbidden to discard carelessly.

To avoid accident, regular maintenance for storage battery is recommended.

5.2 Transporting and Storage

■**Storage**

Avoid store it in extreme cold,heat,dust or humidity environment

Optimum temperature in - 10 ℃ to 40 ℃, relative humidity less than 80% RH, atmospheric pressure range: 760 hpa ~ 1060 hpa.

No corrosive gas, well-ventilated room.

Adjust the height of this stretcher to the lowest .do not put stuff on the stretcher, especially heavy stuff

Please plug off, and keep it away from being squeezed or stamped.

If the transfer stretcher has been stored more than 3 months, it should be taken out of the packaging carton and get power on, charge the battery and pack it up again once it's been confirmed in well condition.

■**Transporting**

The electric transfer stretcher can be transported by normal conveyance after packaging. Strong impact, vibration, squeezing and damp should be avoided during transport.

VI. Common Faults and Exclusion

■Please check if power source level, frequency and power ect. meet with requirements before operating.

■Please plug power off before removing foot bed board. Maintenance work must be supported by professionals.

Common Faults	Cause of the faults	Exclusion
Bed board is not flat	Backrest position	Please raise up the red handle blow the head bed board to adjust the backrest board to suitable angle.
Sound and noise during the stretcher's movement	Over load	Confirm to avoid over load
	Foreign matter stuck in the stretcher Or moving parts stuck	Check the noise source then remove it Add lube to the moving parts to make it work smooth
Stretcher can not be moved Or can only be moved straightly	On brake position Or The direction is touch the ground	Release the brake Press the "Blue" pedal on Direction castor pedal ,then stretcher can be moved freely

VII. Packing List

NO.	Item	Qty	Note		NO.	Item	Qty	Note
1	Transfer Stretcher	1 pc	Bubble pack		2	Head & foot bed board	1 set	Bubble pack
3	Instruction	1 pc						

VIII. Graphic Symbols Meaning

NO.	Graphic symbol	Meaning
1		Type B application part
2		Class II item of double insulation or reinforced insulation
3		Safe working load

IX. Service Life

Date of manufacture: on package

Service life: 5 years